Xnergy

Autonomous Power Technologies

Application Note

BEA29CC - Mounting Guide

Version: 2.0

Date: July 2021

Abstract

This article provides guidelines for mounting the Xnergy BE series wireless charger. It includes correct orientation, clearance, and shielding tray usage for single unit and parallel unit configurations especially for the side mounting applications. This allow engineers to quickly and efficiently design and test their system in vicinity of Xnergy BE series wireless charger.

Table of Contents

Abstract 1
List of Figures 2
1. Introduction 3
2. Transmitter Powering Unit (TPU) 3
2.1. TPU orientation 4
2.2. TPU clearance 5
3. Transmitter pad (TXP) 7
3.1. TXP without shielding tray 8
TXP without shielding tray orientation 8
TXP without shielding tray clearance 8
3.2. TXP with shielding tray 9
TXP with shielding tray orientation 10
TXP with shielding tray clearance 10
4. Receiver charging unit (RCU) 11
4.1. RCU without shielding tray 12
RCU without shielding tray orientation 12
RCU without shielding tray clearance 12
4.2. RCU with shielding tray 14
RCU with shielding tray orientation 14
RCU with shielding tray clearance 15
5. Parallel vertical mounting 16
5.1. Parallel vertical mounting without shielding tray 16
5.2. Parallel vertical mounting with shielding tray 17
Revision History 18
Important Notice and Disclaimer 19

ORIGIN FOR (SG) WESTON ROBOT

Copyright © 2021 XNERGYAPT™ . All rights reserved.

List of Figures

Figure 1: Xnergy BE series wireless charger 3
Figure 2: TPU dimensions 4
Figure 3: Correct orientation for TPU 5
Figure 4: Clearance area for TPU 5
Figure 5: TPU bottom 6
Figure 6: Wall mount bracket 6
Figure 7: Wall mount bracket assembly to TPU 7
Figure 8: Simple ground mounted stand for TPU. 7
Figure 9: TXP dimensions 8
Figure 10: Correct orientation for TXP without shielding tray 8
Figure 11: Clearance area for TXP without shielding tray 9
Figure 12: Simple transmitter stand for TPU and TXP 9
Figure 13: TXP with Aluminium shielding tray 10
Figure 14: Correct orientation for TXP without shielding tray 10
Figure 15: Clearance area for TXP with shielding tray 11
Figure 16: RCU dimensions 11
Figure 17: Correct orientation for RCU without shielding tray 12
Figure 18: Clearance area for RCU with Aluminium back plate 13
Figure 19: Clearance area for RCU with steel plate 14
Figure 20: RCU with shielding tray 14
Figure 21: Orientation for RCU with shielding tray 15
Figure 22: Clearance for RCU with shielding tray 15
Figure 23: RCU shielding tray with holes for cables 16
Figure 24: Examples of RCU side mounting configurations 16
Figure 25: Clearance area for parallel vertical mounting of TXP and RCU without shielding tray 17
Figure 26: Clearance area for parallel vertical mounting of TXP and RCU with shielding tray 18
Figure 27: Simple mounting examples for parallel configurations. 18

ORIGIN FOR (SG) WESTON ROBOT

Copyright © 2021 XNERGYAPT™ . All rights reserved.

1. Introduction

Xnergy BE series wireless charging charges electrical driven applications through the medium of air without physical contact. The wireless charging process uses magnetic field that allows energy to be transferred through magnetic induction. It consists of the transmitter powering unit (TPU) with transmitter pad (TXP) and compact receiver charging unit (RCU) as shown in Figure 1. In the applications, RCU is mounted on mobile robotics to receive the wireless power and charge the battery in the robot.

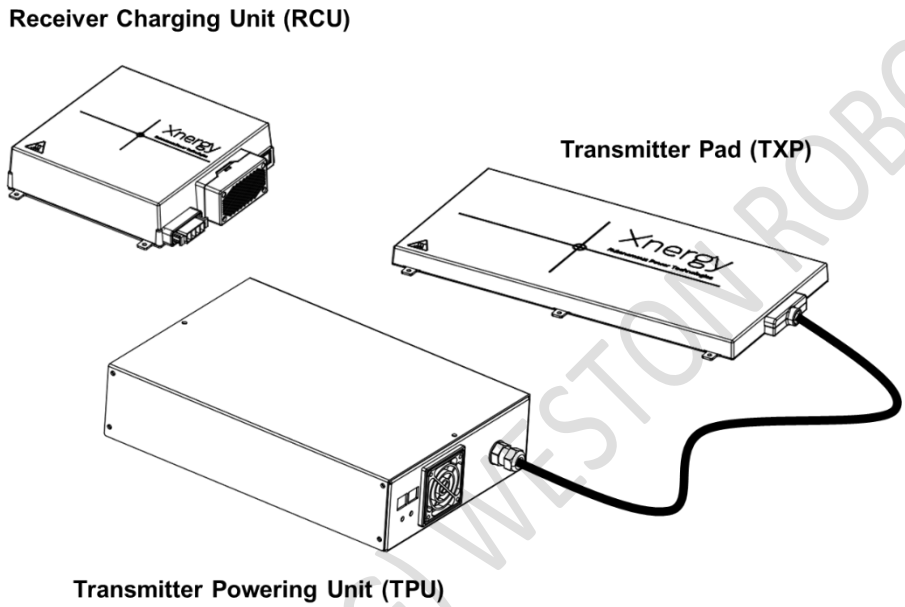

Figure 1: Xnergy BE series wireless charger

This article elaborates correct mounting method for TPU, TXP, and RCU including the correct orientation, clearance, and shielding tray usage for single unit and parallel unit configurations especially for the side mounting applications.

2. Transmitter Powering Unit (TPU)

Figure 2 shows the dimensions of the TPU in millimetres (mm) unit.

ORIGIN FOR (SG) WESTON ROBOT

Copyright © 2021 XNERGYAPT™ . All rights reserved.

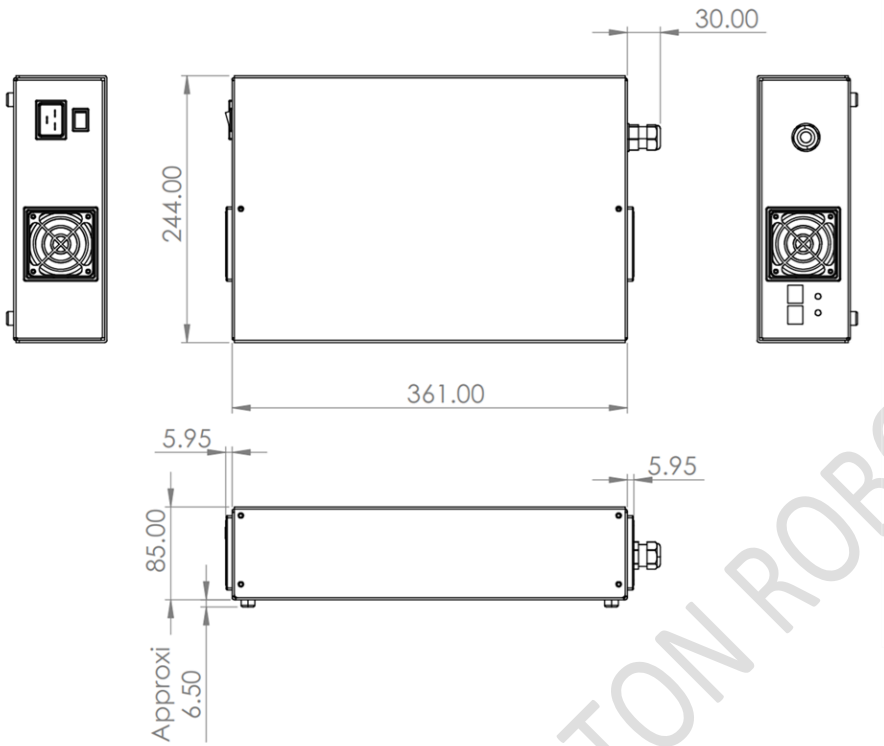

Figure 2: TPU dimensions

2.1. TPU orientation

The TPU can be placed horizontally flat on the ground, or mounted vertically. Refer to the correct orientation given in Figure 3. These orientations consider the reliability and safety aspects for the TPU mounting.

ORIGIN FOR (CG) WESTON ROBOT

Copyright © 2021 XNERGYAPT™ . All rights reserved.

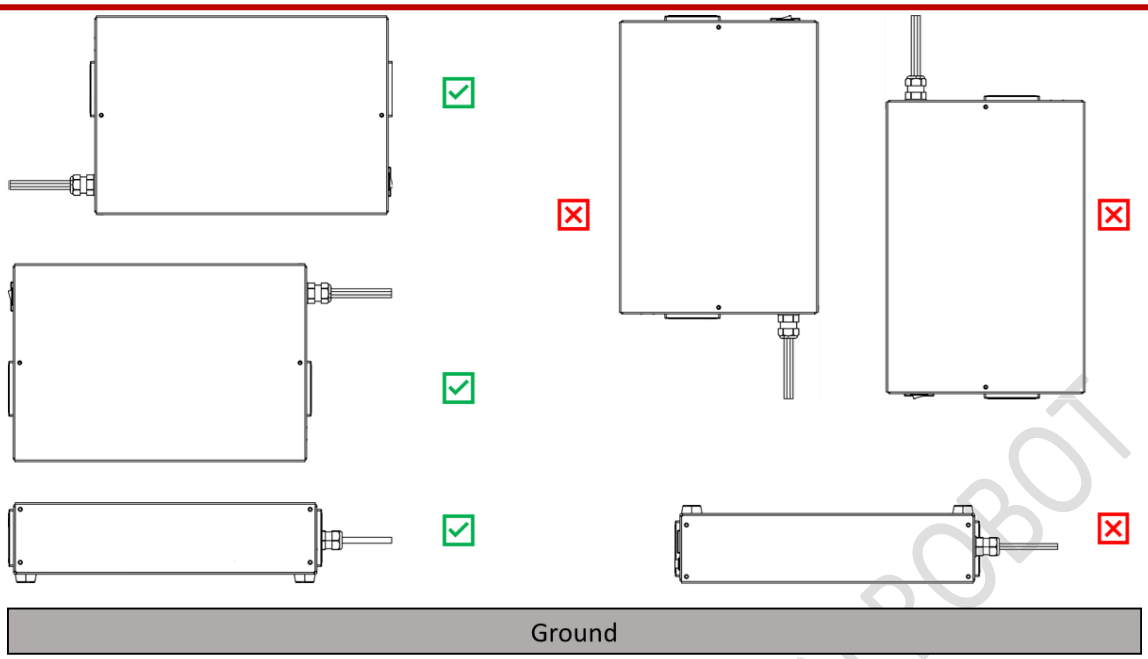

Figure 3: Correct orientation for TPU

2.2. TPU clearance

Figure 4 shows the clearance area for TPU, considering the cables and air flow into and out from the TPU. The air flow is indicated by the arrow.

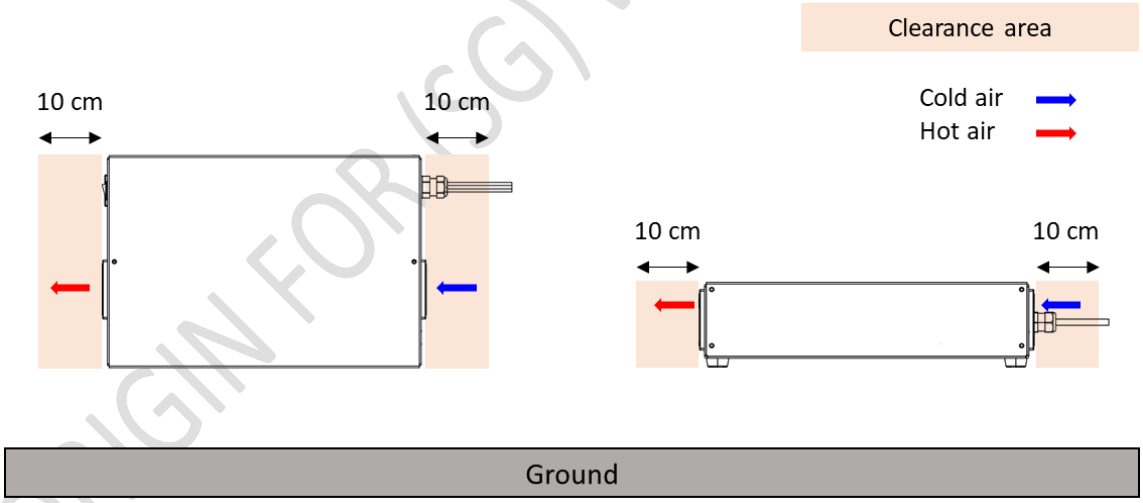

Figure 4: Clearance area for TPU

There are two options to mount the TPU vertically:

- Direct mounting to wall or frame
  Firstly, take out the 4 rubber footers from the bottom side of the TPU, as shown in Figure 5. Use these M5 holes to mount to a wall or frame. Note that the length of screw that goes into the TPU casing should be 4mm ± 1mm.

ORIGIN FOR (SG) WESTON ROBOT

Copyright © 2021 XNERGYAPT™ . All rights reserved.

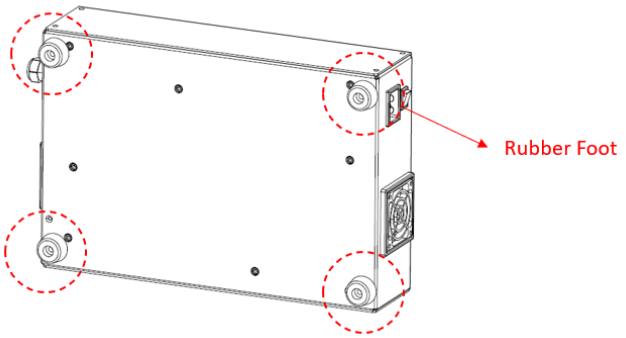

Figure 5: TPU bottom

- Use the wall mount bracket
  The wall mount bracket shown in Figure 6 may be use in cases where TPU need to be fastened from TPU side. For example, mounting to thick frame or wall.

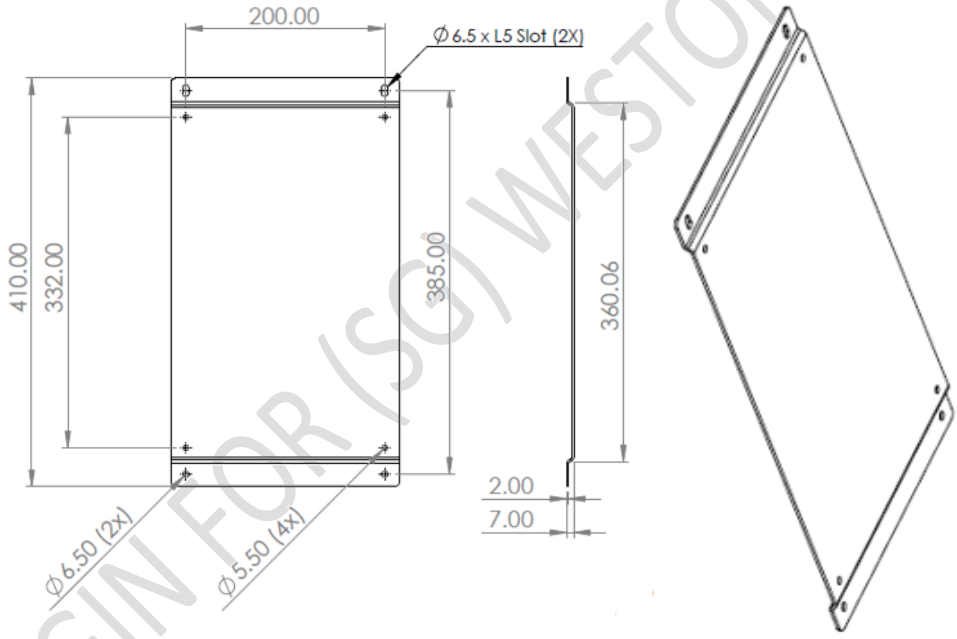

Figure 6: Wall mount bracket

ORIGIN FOR (SG) WESTON ROBOT

Copyright © 2021 XNERGYAPT™ . All rights reserved.

Firstly, unscrew the rubber footers. Then assemble the wall mount bracket to TPU using the same holes for the rubber footers, using M5 x 6mm screws as shown in Figure 7. After this, the wall mount bracket can be fastened to the wall or frame using M6 screws.

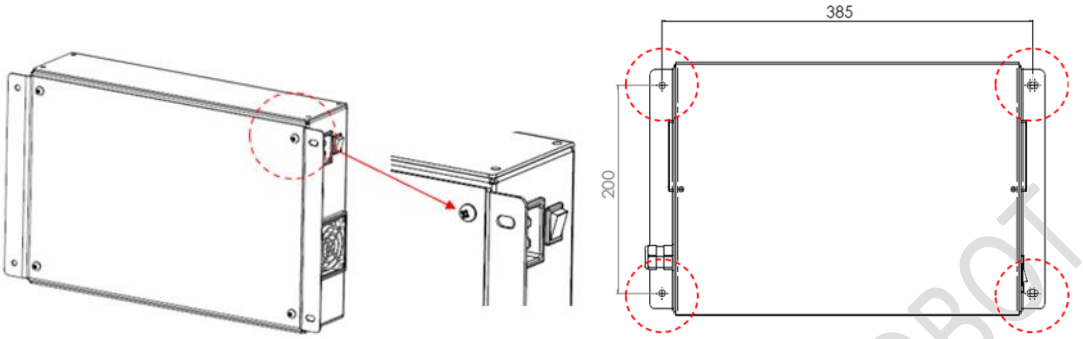

Figure 7: Wall mount bracket assembly to TPU

Alternatively, user can also mount the TPU to a stand fixed to the ground as shown in Figure 8. User needs to ensure the strength and stability of the structure.

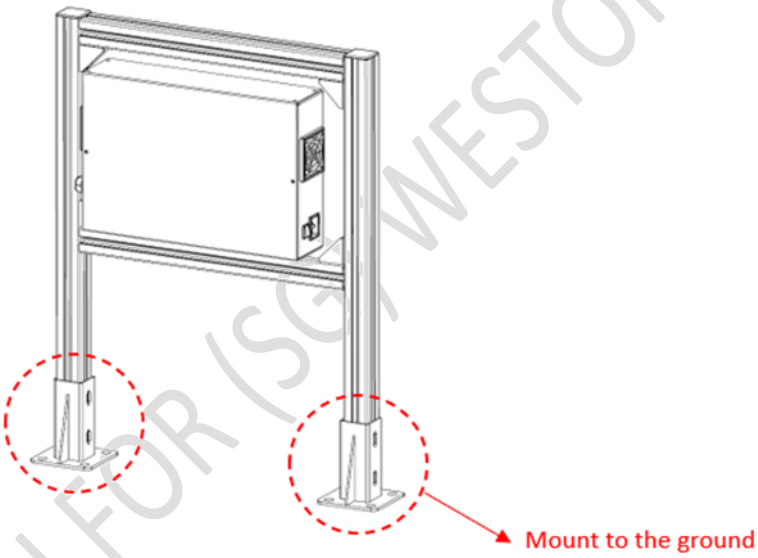

Figure 8: Simple ground mounted stand for TPU.

ORIGIN FOR (SG) WESTON ROBOT

3. Transmitter pad (TXP)

Figure 9 shows the dimensions of the TPU in millimetres (mm) unit. The TXP has 6 mounting holes for M4 screws. Ensure that there is no highly protruding screws' part at the side of TXP. Flat head screws or low profile head screws are recommended.

Copyright © 2021 XNERGYAPT™ . All rights reserved.

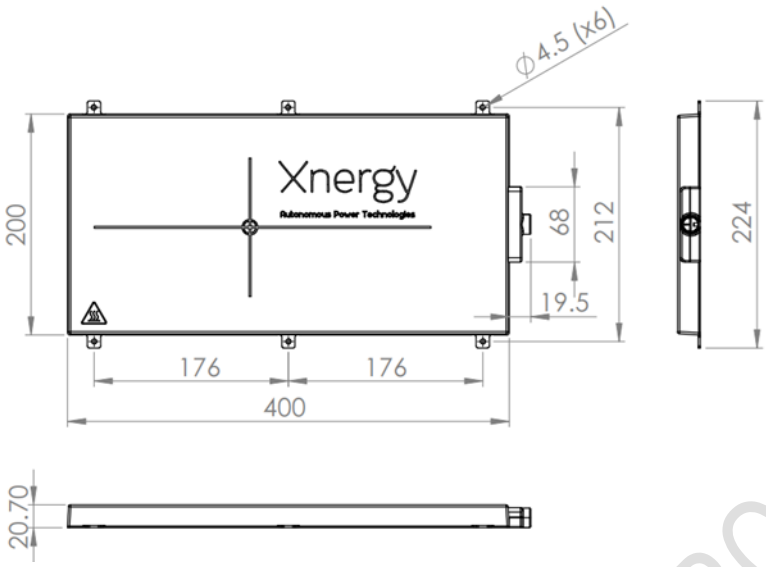

Figure 9: TXP dimensions

There are two options for TXP mounting, i.e. TXP without shielding tray and TXP with shielding tray.

3.1. TXP without shielding tray

TXP without shielding tray orientation

Figure 10 shows the correct orientation for TXP mounting. Xnergy logos on both TXP and RCU are recommended to have same orientation.

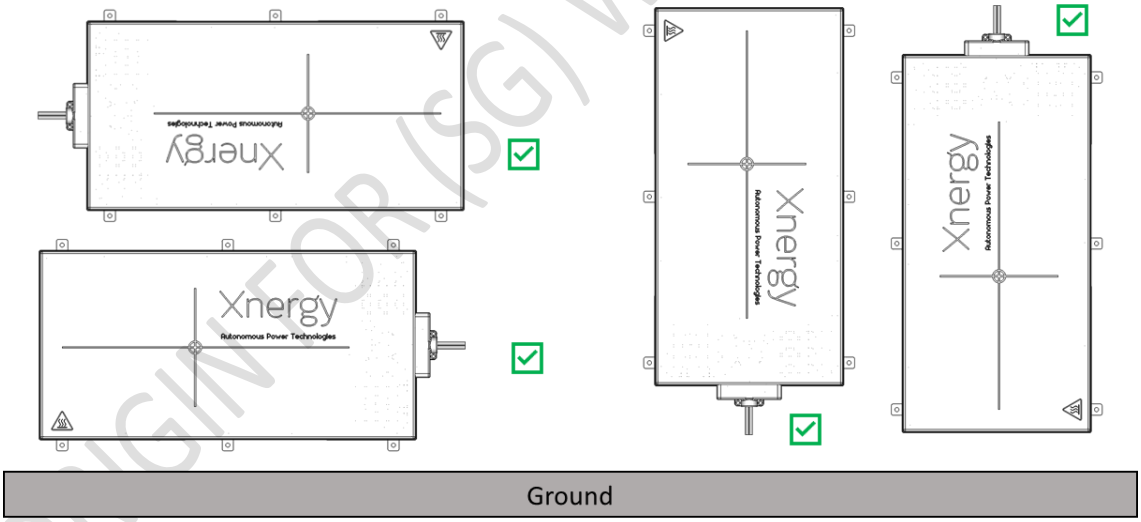

Figure 10: Correct orientation for TXP without shielding tray

TXP without shielding tray clearance

Figure 11 shows the clearance area (keep out area) for TXP without shielding tray. The clearance area extends 10 cm away from the TXP. In this clearance area, there should be no conductive object (metallic, carbon fibre, etc.), magnetic object, and electronics.

At the back of the TXP, Aluminium plate of thickness ≥ 1mm is recommended.

ORIGIN FOR (SG) WESTON ROBOT

Copyright © 2021 XNERGYAPT™ . All rights reserved.

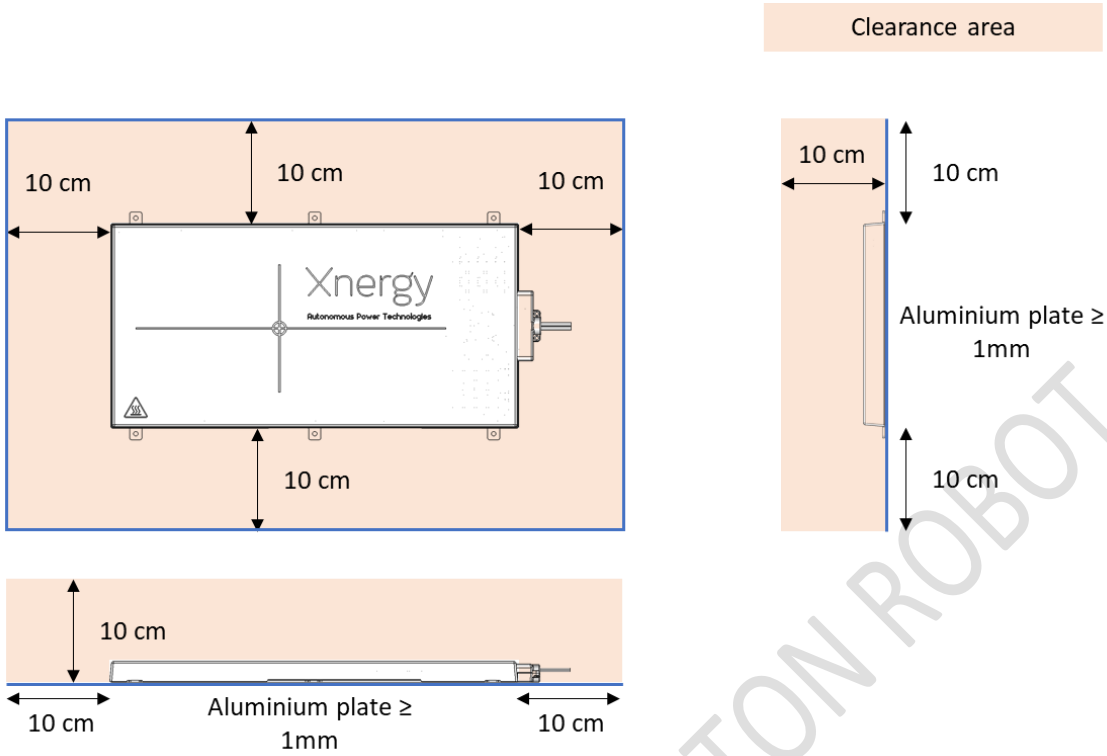

Figure 11: Clearance area for TXP without shielding tray

In some cases where there are no electronics or magnetic metal such as steel or iron in surrounding of TXP, the Aluminium plate can be omitted such as shown in Figure 12.

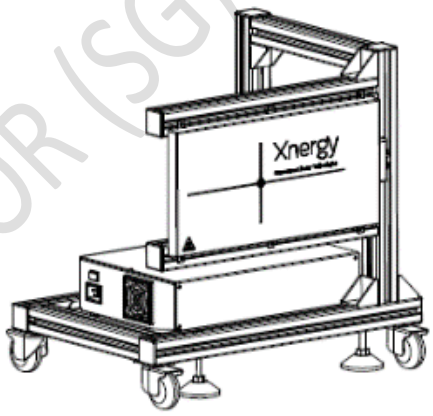

Figure 12: Simple transmitter stand for TPU and TXP

3.2. TXP with shielding tray

In some compact applications that requires smaller clearance area, a shielding tray can be used such as shown in Figure 13. The shielding tray can be assembled to the TXP using the M4 mounting holes on TXP.

ORIGIN FOR (SG) WESTON ROBOT

Copyright © 2021 XNERGYAPT™ . All rights reserved.

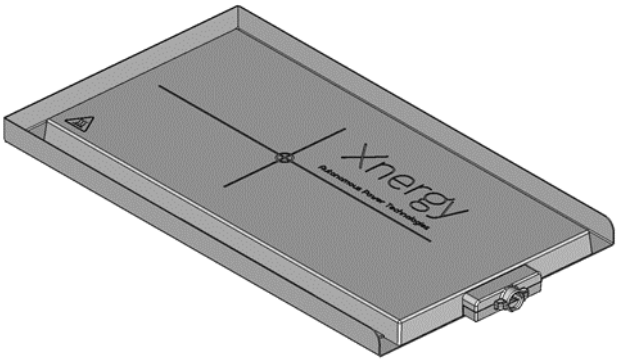

Figure 13: TXP with Aluminium shielding tray

TXP with shielding tray orientation

Figure 14 shows the correct orientation for TXP mounting with Aluminium shielding tray. Xnergy logos on both TXP and RCU are recommended to have same orientation.

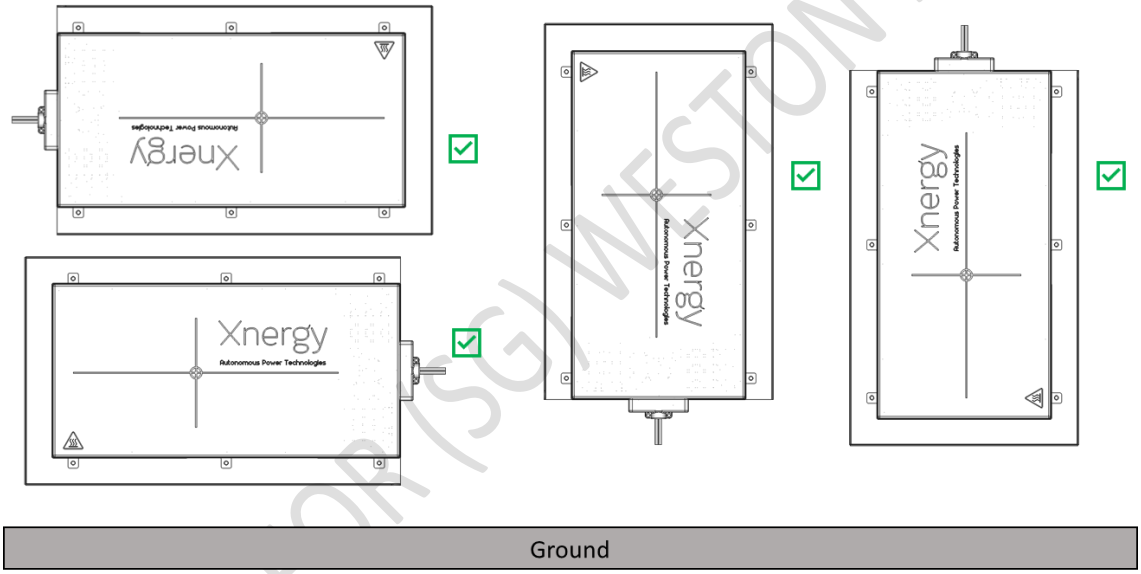

Figure 14: Correct orientation for TXP without shielding tray

TXP with shielding tray clearance

Figure 15 shows the clearance area (keep out area) for TXP with shielding tray. The shielding tray is made of Aluminium of thickness ≥ 1mm. It surrounds the TXP on 3 sides with distance of 3 mm.

In this clearance area, there should be no conductive object (metallic, carbon fibre, etc.), magnetic object, and electronics.

ORIGIN FOR (SG) WESTON ROBOT

Copyright © 2021 XNERGYAPT™ . All rights reserved.

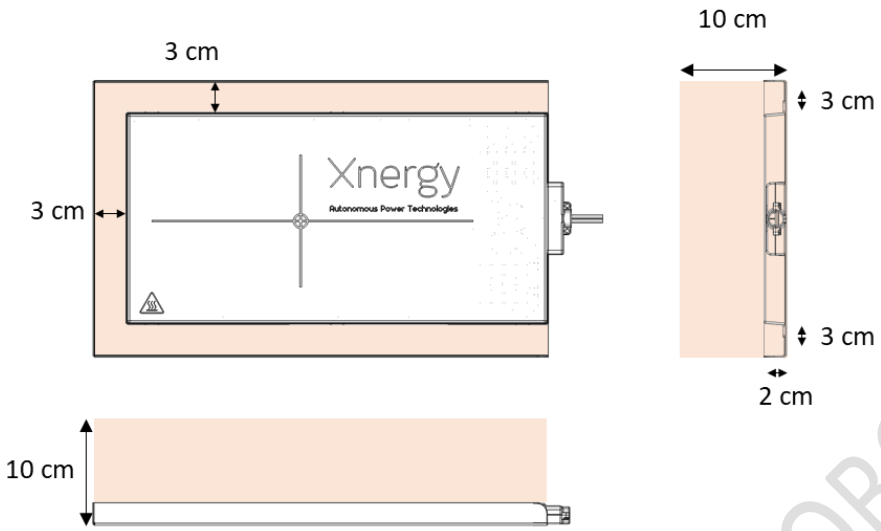

Figure 15: Clearance area for TXP with shielding tray

4. Receiver charging unit (RCU)

Figure 16 shows the dimensions of the TPU in millimetres (mm) unit. The RCU has 4 mounting holes for M4 screws.

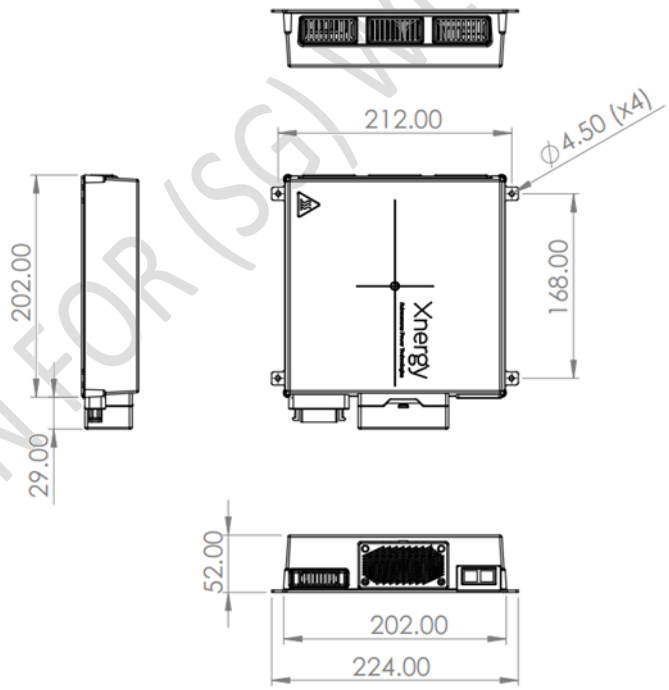

Figure 16: RCU dimensions

There are three options for RCU mounting:

- RCU with Aluminium plate
- RCU with steel plate
- RCU with shielding tray.

ORIGIN FOR (SG) WESTON ROBOT

Copyright © 2021 XNERGYAPT™ . All rights reserved.

4.1. RCU without shielding tray

RCU without shielding tray orientation

Figure 17 shows the correct orientation for RCU mounting. Xnergy logos on both TXP and RCU are recommended to have same orientation.

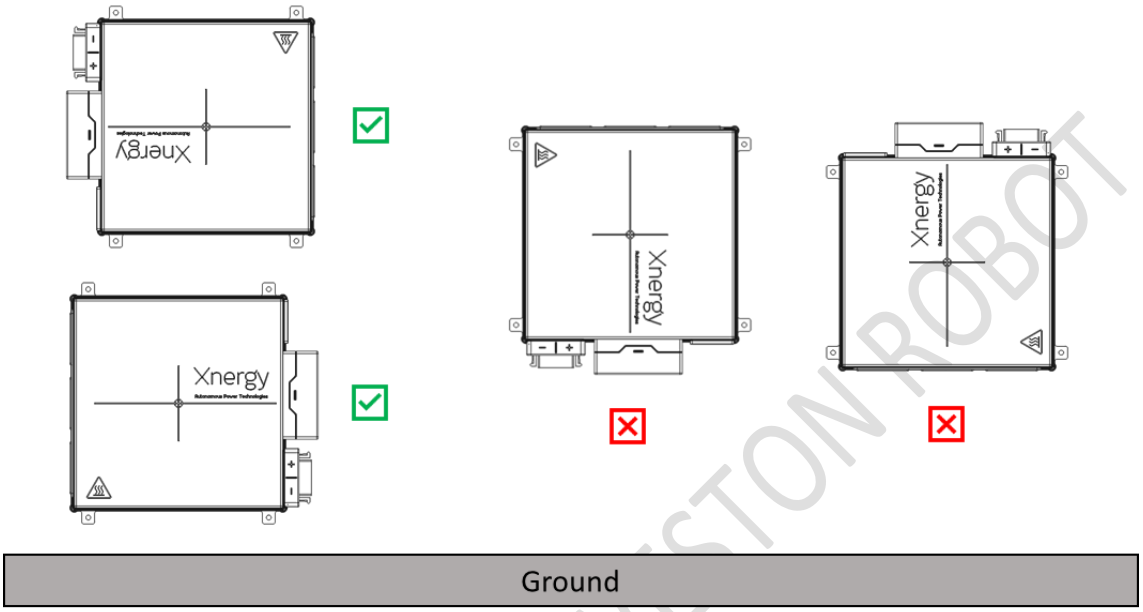

Figure 17: Correct orientation for RCU without shielding tray

RCU without shielding tray clearance

The RCU can be mounted on Aluminium back plate with clearance area as shown in Figure 18. The clearance area extends 10 cm and 12 cm away from the RCU. In this clearance area, there should be no conductive object (metallic, carbon fibre, etc.), magnetic object, and electronics. At the back of the RCU, Aluminium plate of thickness ≥ 1mm is recommended.

ORIGIN FOR (SG) WESTON ROBOT

Copyright © 2021 XNERGYAPT™ . All rights reserved.

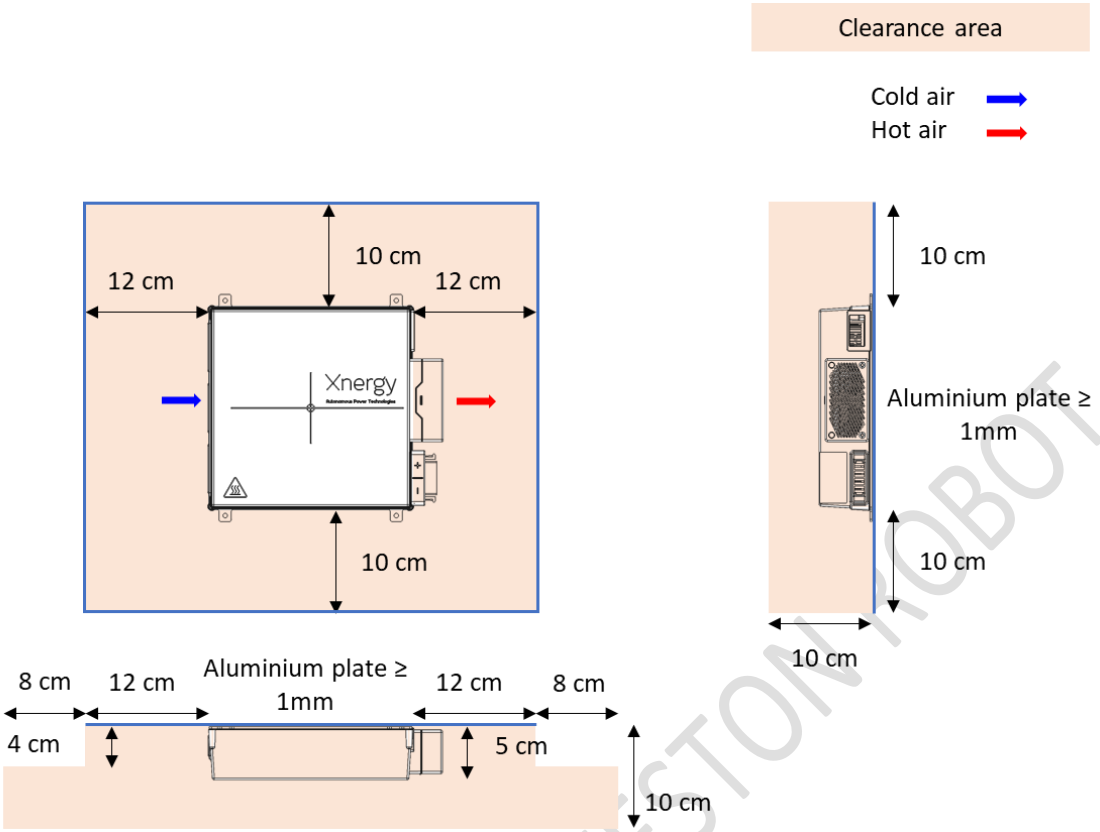

Figure 18: Clearance area for RCU with Aluminium back plate

In some cases where the size allows, user might want to mount the RCU on steel or iron plate. The clearance for RCU with steel plate is shown in Figure 19. In this case, the RCU should be distanced from steel plate by using 30 mm spacer. The spacer can be made of steel or Aluminium profile.

ORIGIN FOR (SG) WESTON ROBOT

Copyright © 2021 XNERGYAPT™ . All rights reserved.

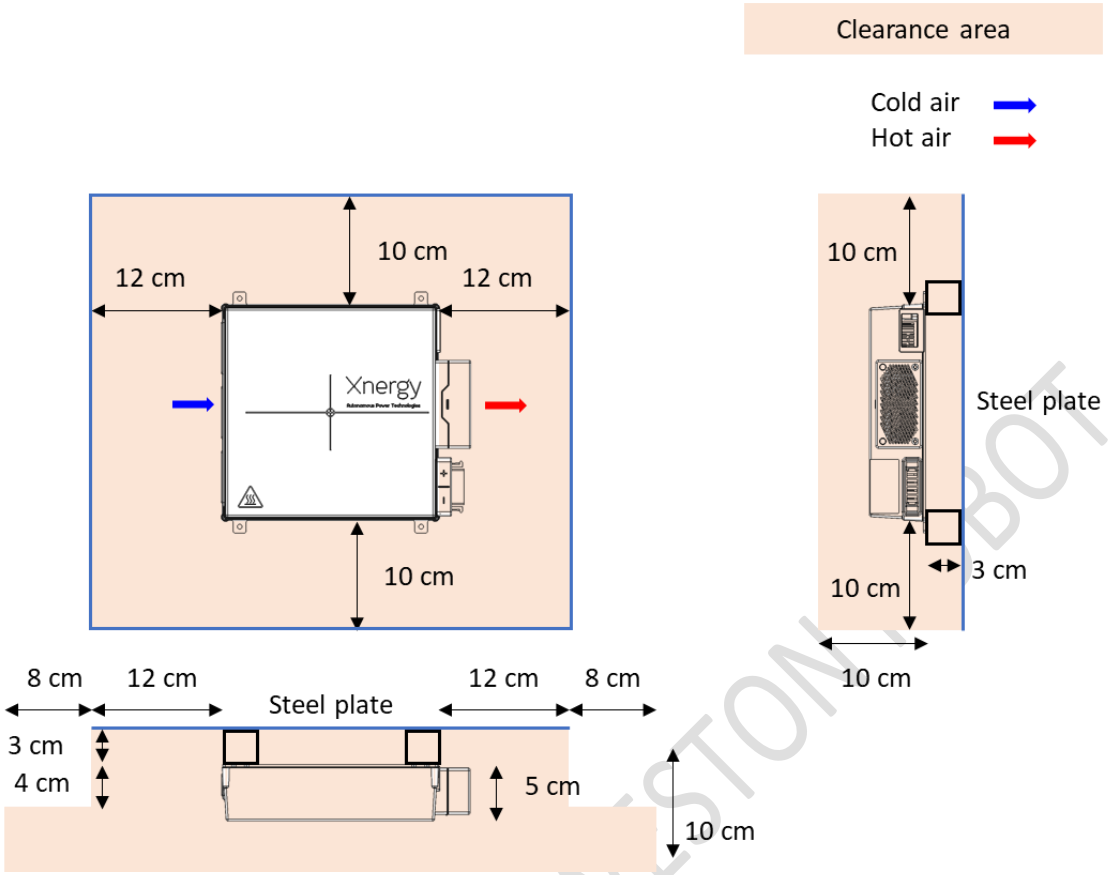

Figure 19: Clearance area for RCU with steel plate

4.2. RCU with shielding tray

In some compact applications that requires smaller clearance area, a shielding tray can be used such as shown in Figure 20. The shielding tray can be assembled to the RCU using the M4 mounting holes on RCU.

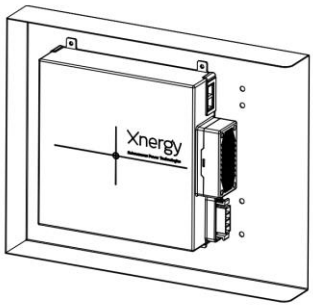

Figure 20: RCU with shielding tray

RCU with shielding tray orientation

ORIGIN FOR (SG) WESTON ABOT

Copyright © 2021 XNERGYAPT™ . All rights reserved.

Figure 21 shows the correct orientation for RCU mounting. Xnergy logos on both TXP and RCU are recommended to have same orientation.

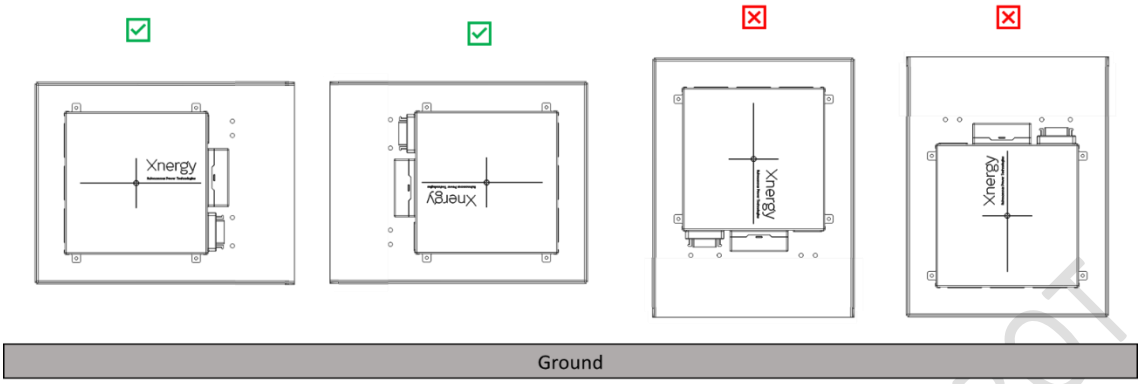

Figure 21: Orientation for RCU with shielding tray

RCU with shielding tray clearance

Figure 22 shows the clearance area (keep out area) for RCU with shielding tray. The shielding tray is made of Aluminium of thickness ≥ 1mm. It surrounds the RCU on 3 sides with distance of 4 mm. The fan's side has distance of 12 cm.

In this clearance area, there should be no conductive object (metallic, carbon fibre, etc.), magnetic object, and electronics.

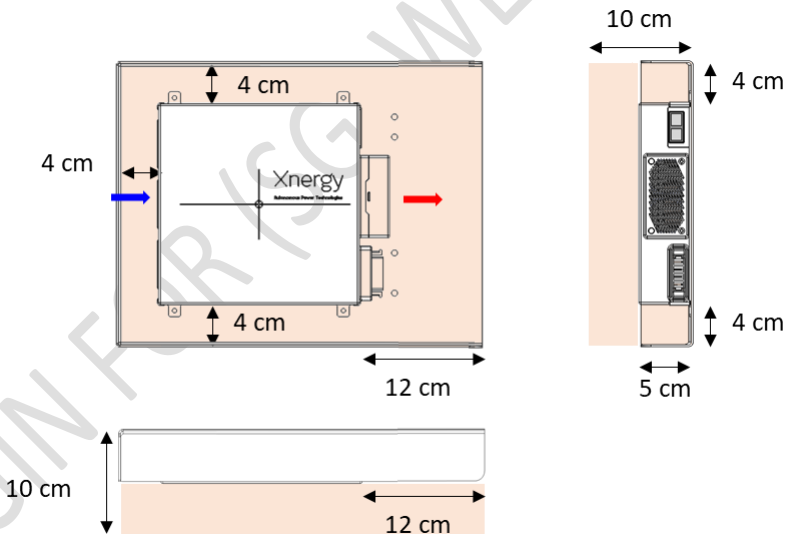

Figure 22: Clearance for RCU with shielding tray

In the size constrained case where RCU power output cable and communication cable need to go through the tray, holes can be made in the tray at distance of 7 cm away from RCU (Figure 23).

ORIGIN FOR (SG) WESTON ROBOT

Copyright © 2021 XNERGYAPT™ . All rights reserved.

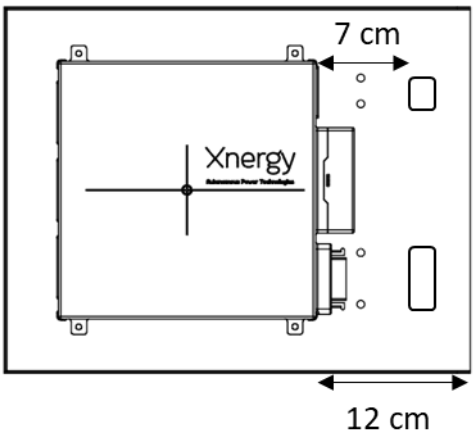

Figure 23: RCU shielding tray with holes for cables

Examples of RCU side mounting configurations are shown in Figure 24.

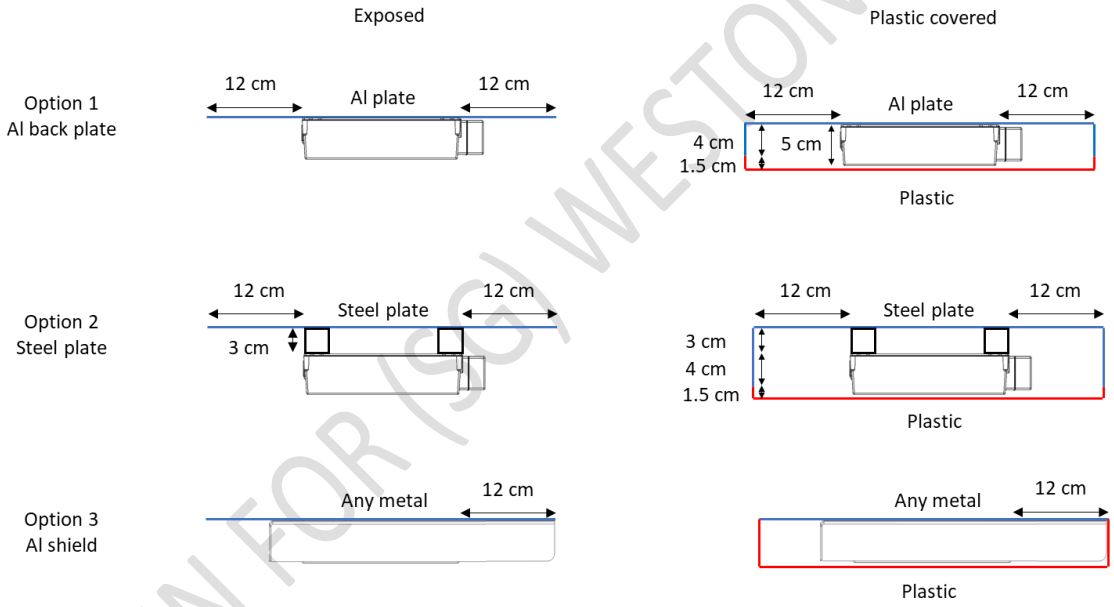

Figure 24: Examples of RCU side mounting configurations

5. Parallel vertical mounting

For applications that require higher power, 2 or 3 units of wireless charger can be configured in parallel.

5.1. Parallel vertical mounting without shielding tray

Figure 25 shows the clearance area for the parallel vertical mounting of TXP and RCU without shielding tray. The distance between the different units is 20 cm. This also applies for 3 units in parallel. Note that each pairs of TXP and RCU need to be aligned (similar height from ground) for wireless charging operations.

ORIGIN FOR (SG) WESTON ROBOT

Copyright © 2021 XNERGYAPT™ . All rights reserved.

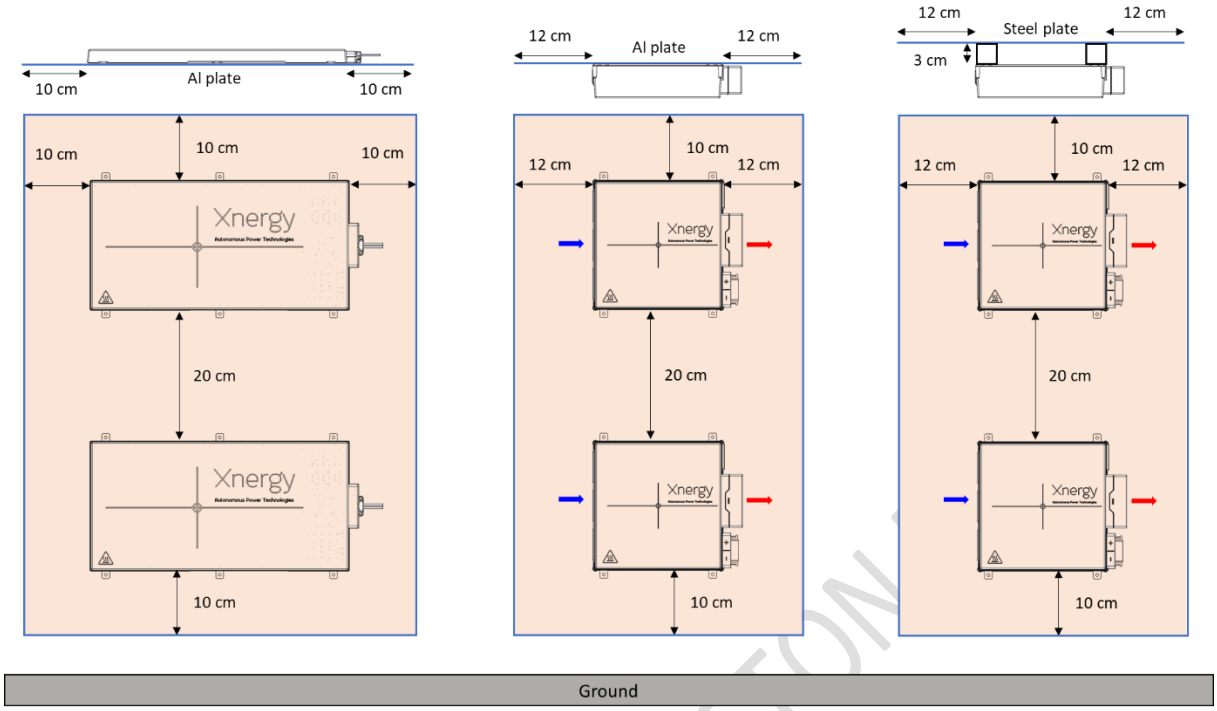

Figure 25: Clearance area for parallel vertical mounting of TXP and RCU without shielding tray

The TXP units are mounted on Aluminium plate with thickness ≥ 1 mm. Figure 25 also shows the RCU mounting on Aluminium plate and on steel/ iron plate with 3 cm spacer. In the case where plastic enclosure are needed, the same principles as in Figure 24 can be used.

5.2. Parallel vertical mounting with shielding tray

For applications with space constraint, shielding tray can be employed at both TXP and RCU side for parallel configurations as shown in Figure 26. By using the shielding tray, the distance between different units can be reduced to 10 cm. This also applies for 3 units in parallel. Note that each pairs of TXP and RCU need to be aligned (similar height from ground) for wireless charging operations.

In the case where plastic enclosure are needed, the same principles as in Figure 24 can be used.

ORIGIN FOR (SG) WESTON

Copyright © 2021 XNERGYAPT™ . All rights reserved.

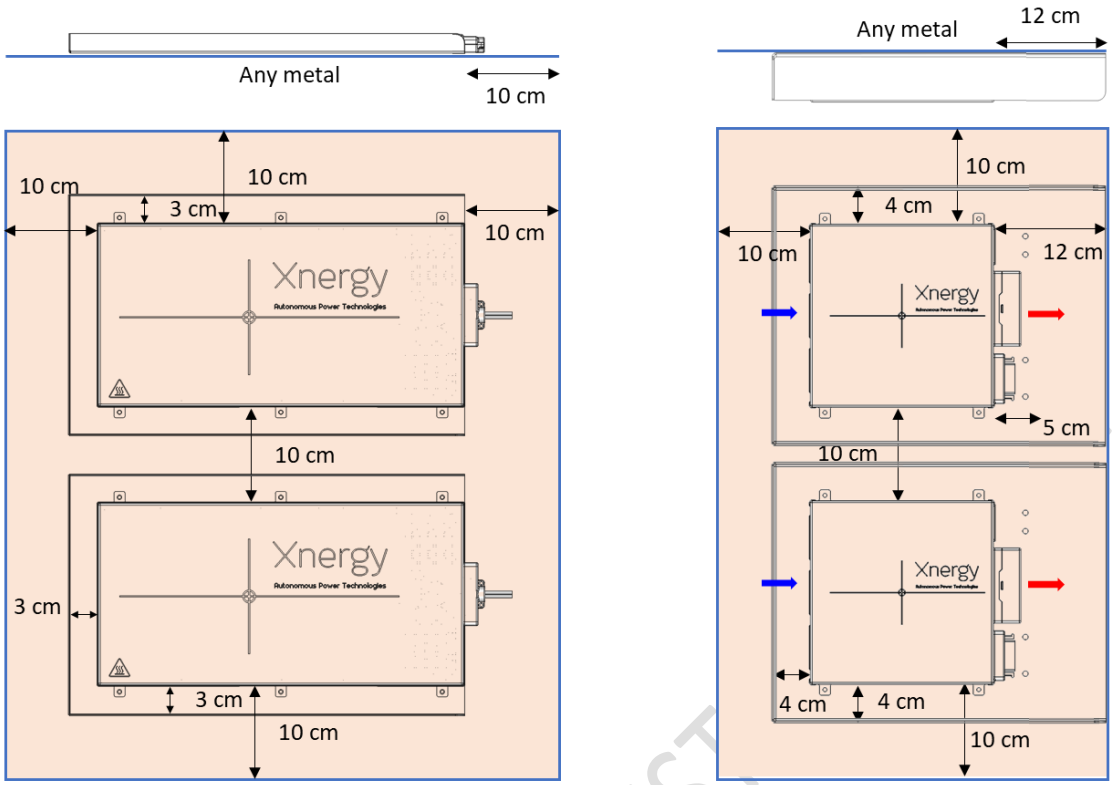

Figure 26: Clearance area for parallel vertical mounting of TXP and RCU with shielding tray

Example of simple mounting configurations for 2 units in parallel and 3 units in parallel are shown below:

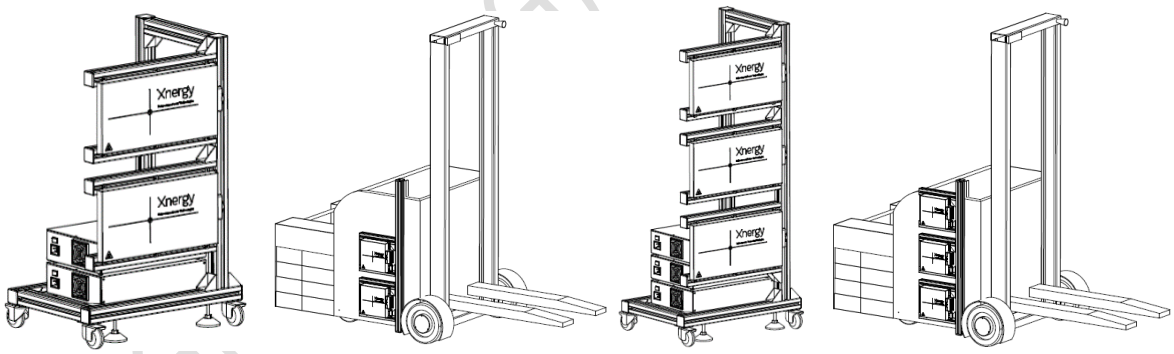

Figure 27: Simple mounting examples for parallel configurations.

Revision History

Version control			
Version Number	**Date issued**	**Author**	**Update information**
V1.0	2020.10.16	Vincent Chuang	First published version
V1.1	2021.05.31	Arie Nawawi/ Vincent Chuang	Update distance for parallel unit and shield information

Copyright © 2021 XNERGYAPT™ . All rights reserved.

V1.2	2021.07.27	Arie Nawawi	Update orientation and clearance for single and parallel unit

Important Notice and Disclaimer

XNERGY PROVIDES TECHNICAL DATA (INCLUDING DATASHEETS), DESIGN RESOURCES (INCLUDING REFERENCE DESIGNS), APPLICATION OR OTHER DESIGN ADVICE, SAFETY INFORMATION, AND OTHER RESOURCES "AS IS" AND WITH ALL FAULTS, AND DISCLAIMS ALL WARRANTIES, EXPRESS AND IMPLIED, INCLUDING WITHOUT LIMITATION ANY IMPLIED WARRANTIES OF MERCHANTABILITY, FITNESS FOR A PARTICULAR PURPOSE OR NON-INFRINGEMENT OF THIRD PARTY INTELLECTUAL PROPERTY RIGHTS.

These resources are intended for skilled engineers working with XNERGY products. You are solely responsible for (1) selecting the appropriate XNERGY products for your application, (2) designing, validating and testing your application, and (3) ensuring your application meets applicable standards, and any other safety, security, or other requirements. These resources are subject to change without notice. XNERGY grants you permission to use these resources only for development of an application that uses the XNERGY products described in the resource. Other reproduction and display of these resources is prohibited. No license is granted to any other XNERGY intellectual property right or to any third party intellectual property right. XNERGY disclaims responsibility for, and you will fully indemnify XNERGY and its representatives against, any claims, damages, costs, losses, and liabilities arising out of your use of these resources. XNERGY's products are provided subject to XNERGY's Terms of Sale or other applicable terms provided in conjunction with such XNERGY products. XNERGY's provision of these resources does not expand or otherwise alter XNERGY's applicable warranties or warranty disclaimers for XNERGY products.

Mailing Address: Xnergy Autonomous Power Technologies Pte Ltd., 2 Clean Tech Loop, #04-09, Singapore 637144

Copyright © 2021 XNERGYAPT™ . All rights reserved.

ORIGIN FOR (SG) WESTON PROJECT

Copyright © 2021 XNERGYAPT™ . All rights reserved.